MCU

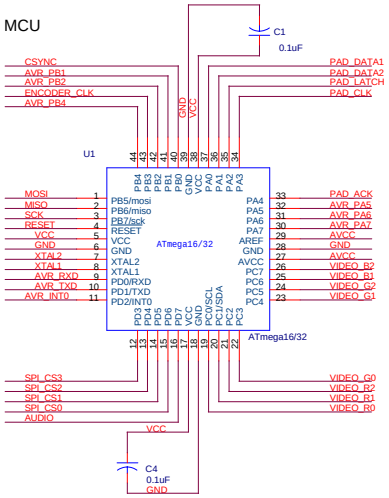

Signal Snubbers

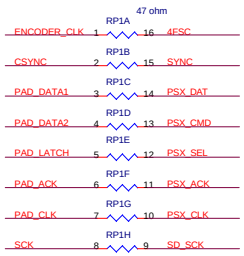

PortA supports either:
Two NES or SNES Controllers
One Atari/Commodore Joystick
One Sega Genesis Controller
One Playstation 1/2 Controller
General Purpose ADC inputs
General Purpose I/O (5V, CMOS Logic Levels)

40 Pin DIP Package

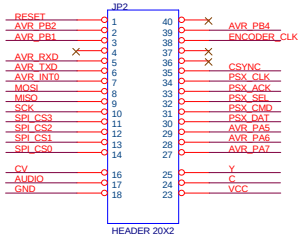

Pins 4, 36, 37 and 40 are reserved for expansion. The PCB is mounted 'upside down and backwards' for use with a baseboard , so do NOT use this pinout when designing a baseboard. I'll provide a separate document with the "user" pinout of the module.

microSD/input level protection

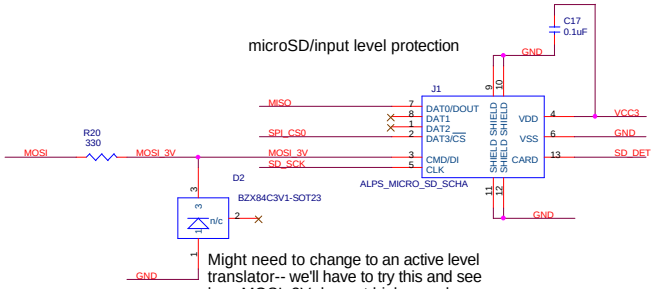

Might need to change to an active level translator-- we'll have to try this and see how MOSI_3V does at high speed.

ADC Power Filtering

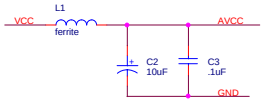

Clock

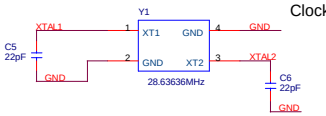

ISP

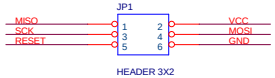

Manual Reset

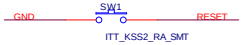

3.3V Power Supply (for micro/SD/MMC)

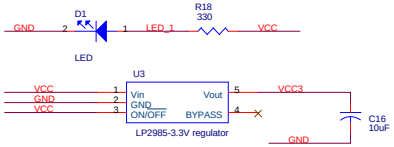

RGB Outputs

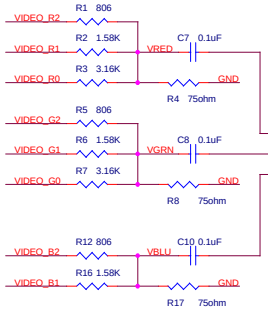

NTSC Encoder

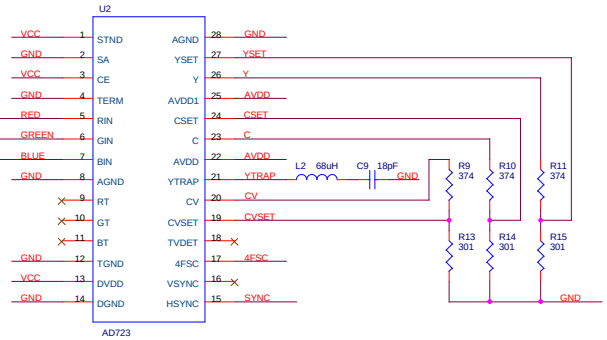

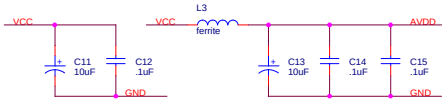

Based on the work found at: http://belogic.com/uzebox/
UZEBOX is a registered trademark and is used by permission.

Embedded Engineering, LLC

3601 SE 175th Ave
Vancouver, WA 98683
clay@embeddedengineeringllc.com

EMBEDDED engineering

Title	UZEBOX(tm) Stamp Core	
Size A	Document Number CNC082908	Rev 1.0
Date: Monday, September 01, 2008	Sheet 1 of 1	